www.basicsinmaths.com

TS

X CLASS

Mathematics

SOLVED QUESTION PAPER-2

By Satyam

SOLVED PRACTICE PAPER - 2

SUBJECT: MATHEMATICS **TIME: 3Hours**

CLASS: X **TOTAL MARKS: 80**

PART – A

SECTION – I ($6 \times 2 = 12$)

1. If A and B are disjoint sets, then how can you find n (A∪B)?

Answer:

By definition of disjoint set we mean that there won't be any common elements in both the sets.

$\Rightarrow n(A \cap B)=0$

In general, $n(A \cup B) = n(A) + n(B) - n(A \cap B)$

Since A and B are disjoint sets, $n(A \cap B)=0$

$n(A \cup B) = n(A) + n(B)$

2. Write the formula of nth term of G.P. and explain the terms in it.

Answer:

$a_n = a\, r^{n-1}$

a is the first term of GP

r is the common ratio

n is the no. of terms of GP

a_n is the nth term of GP

3. Find the volume of the right circular cone with a radius 6 cm and height 7 cm.

Answer:

Here,

r=6cm and h=7cm

Volume of right circular cone $= \frac{1}{3}\pi r^2 h$

$= \frac{1}{3} \times \frac{22}{7} \times 6 \times 6 \times 7$

$= \frac{1}{3} \times 22 \times 36$

$= 264 cm^3$

4. Calculate $\frac{1 - \tan^2 45}{1 + \tan^2 45}$

Answer:

$$\frac{1 - \tan^2 45}{1 + \tan^2 45} = \frac{1 - (1)^2}{1 + (1)^2} = \frac{0}{1} = 0$$

5. Write two examples for equally likely events.

Answer:

Tossing a coin. => Head and tails have equal chances.

Rolling a dice. => All faces have equal chances.

6. The product of two consecutive positive integers is 306. Find the integers

Answer:

Let two consecutive numbers are x and (x + 1)

product of x and (x + 1) = 306

$\Rightarrow x(x+1) = 306$
$\Rightarrow x^2 + x - 306 = 0$

$\Rightarrow x^2 + 18x - 17x - 306 = 0$
$\Rightarrow x(x+18) - 17(x+18) = 0$
$\Rightarrow (x+18)(x-17) = 0 \Rightarrow x = 17$ and -18
Hence, numbers are $x = 17$ and $(x+1) = 18$

SECTION – II ($6 \times 4 = 24$)

7. If A = {x: x is a prime and x <10}, B = {x: x is a factor of 6}, then find A∩B, A∪B, A – B and B – A.

Answer:

A={ 2,3,5,7}, B= { 1,2,3,6}
AUB = {2,3,5,7} U {1,2,3,6}
= {1,2,3,5,6,7}
∴ AUB= {1,2,3,5,6,7}
A ∩ B = {2,3,5,7} i∩{1,2,3,6}
={2,3}
Therefore A ∩B ={2,3}
A-B = {2,3,5,7} - {1,2,3,6}
∴ A-B = {5,7}

8. For what value of 'm' in the following, $mx + 4y = 10$ and $9x + 12y = 20$ system of equations will have no solution? why?

Answer:

Given equations $mx + 4y = 10$ and $9x + 12y = 20$ have no solution

$\Longrightarrow \frac{a_1}{a_2} = \frac{b_1}{b_2}$

$\Longrightarrow \frac{m}{9} = \frac{4}{12}$

$\Longrightarrow 12\,m = 36 \Longrightarrow m = 3$

9. If the distance between two points (8, x) and (x, 8) is $2\sqrt{2}$ units, then find the value of x.

Answer:

$\sqrt{(8-x)^2 + (x-8)^2} = 2\sqrt{2}$

$\sqrt{2(x-8)^2} = 2\sqrt{2}$

Squaring on both sides

$2\,(x-8)^2 = (2\sqrt{2})^2$

$2\,(x-8)^2 = 8$

$(x-8)^2 = 4$

$x - 8 = \pm 2$

$x - 8 = 2$ or $x - 8 = -2$

Hence, the required value of $x = 10$ and $x = 6$.

10. From an external point, two tangents are drawn to a circle. A line joining the external point and the center of the circle bisects the angle between the tangents. Is this true or not? Justify your answer.

Answer:

It Is true,

Let PQ and PR are two tangents drawn from a point P exterior of the circle with centre O

join OQ and OR

in Δ OQP and Δ OQR

OQ = OR(radii of the same circle)

$\angle OQP = \angle ORP = 90^0$

OP = OP (common side)

By RHS congruency

Δ OQP ≅ Δ OQR

∠OPQ = ∠OPR (by CPCT)

∴ OP is the angle bisector of ∠QPR

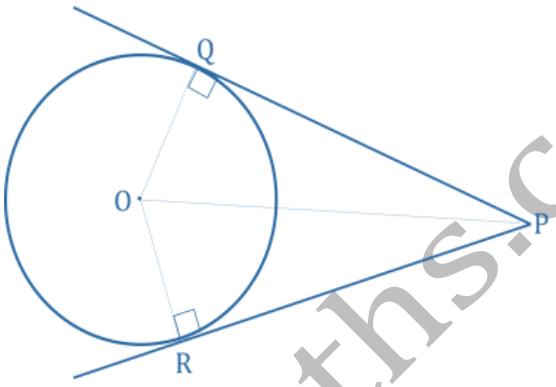

Hence, A line joining the external point and the center of the circle bisects the angle between the tangents.

11. What is the probability of a number picked from first twenty natural numbers is even composite number?

Answer:

The composite even numbers up to 20 are-

4,6,8,10,12,14,16,18,20

Total number of even composite numbers up to 20=9

Therefore,

Total number of possible outcomes =20

No. of favourable outcomes =9

∴ Probability of selecting a even composite number = $\frac{9}{20}$

12. Find the median of the first 6 prime numbers.

Answer:

The first 6 prime numbers are 2, 3, 5, 7, 11 and 13.

Total number of observations, n = 6 (Even)

Median = (Value of 3rd observation + Value of 4th observation)/2

= (5 + 7)/2

= 12/2

∴Median = 6

SECTION – III ($4 \times 6 = 24$)

13. Use Euclid's division lemma to show that the square of any positive integer of the form $5n$, $5n + 1$ or $5n + 4$

Answer:

Let 'a' be any positive integer and b = 5.
Using Euclid Division Lemma,
$a = bq + r \quad [0 \le r < b]$

$\Rightarrow a = 5q + r \quad [0 \le r < 5]$
Now, possible value of r :
$r = 0, r = 1, r = 2, r = 3, r = 4$
CASE I :
If we take, $r = 0$
$\Rightarrow a = 5q + 0$
$\Rightarrow a = 5q$
On squaring both sides;
$\Rightarrow a^2 = (5q)^2$
$\Rightarrow a^2 = 25q^2$

$\Rightarrow a^2 = 5(5q^2)$
$\Rightarrow a^2 = 5n. \quad [\text{Here, } n = 5q^2]$
CASE II :
If we take, $r = 1$
$\Rightarrow a = 5q + 1$
On squaring both sides;
$\Rightarrow a^2 = (5q + 1)^2$
$\Rightarrow a^2 = 25q^2 + 10q + 1$
$\Rightarrow a^2 = 5(5q^2 + 2q) + 1$
$\Rightarrow a^2 = 5n + 1 \quad [\text{Here, } n = 5q^2 + 2q]$
CASE III :
If we take, $r = 2$
$\Rightarrow a = 5q + 2$
On squaring both sides;
$\Rightarrow a^2 = (5q + 2)^2$
$\Rightarrow a^2 = 25q^2 + 20q + 4$
$\Rightarrow a^2 = 5(5q^2 + 4q) + 4$
$\Rightarrow a^2 = 5n + 4 \quad [\text{Here, } n = 5q^2 + 4q]$
CASE IV :
If we take, $r = 3$
$\Rightarrow a = 5q + 3$
On squaring both sides;
$\Rightarrow a^2 = (5q + 3)^2$
$\Rightarrow a^2 = 25q^2 + 30q + 5 + 4$
$\Rightarrow a^2 = 5(5q^2 + 6q + 1) + 4$
$\Rightarrow a^2 = 5n + 4 \quad [\text{Here, } n = 5q^2 + 6q + 1]$
CASE V :
If we take, $r = 4$
$\Rightarrow a = 5q + 4$
On squaring both sides;

$\Rightarrow a^2 = (5q + 4)^2$
$\Rightarrow a^2 = 25q^2 + 40q + 15 + 1$
$\Rightarrow a^2 = 5\,(5q^2 + 8q + 3) + 1$
$\Rightarrow a^2 = 5n + 1$ [Here, $n = 5q^2 + 8q + 3$]
Hence, the square of any integer is either of the form 5m, 5m+1 or 5m+4 for some integer m.

14. Draw the graph of $p(x) = x^2 - 2x - 8$ and find the zeroes of the polynomial from it.

Answer:

Let $y = x^2 - 2x - 8$

x	-4	-3	-2	-1	0	1	2	3	4	5	6
$y = x^2 - 2x - 8$	16	7	0	-5	-8	-9	-8	-5	0	7	16

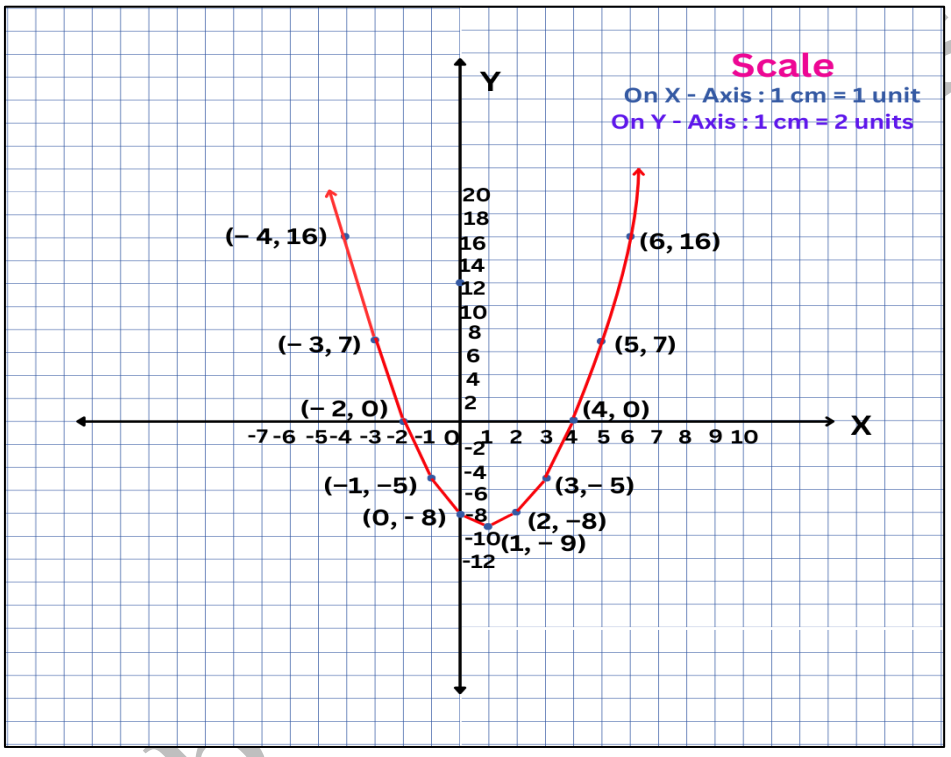

The polynomial $f(x) = x^2 - 2x - 8 = (x - 4)(x + 2)$ is factorizable into two distinct linear factors $(x - 4)$ and $(x + 2)$. So, the parabola cuts X-axis at two distinct points (4, 0) and (-2, 0). the x-coordinates of these points are zeros of f(x).

$\therefore$ the solution is $x = -2$ or $x = 4$

15. Find the roots of the quadratic Equation $5x^2 - 7x - 6 = 0$ by "completing squaring" method?

Answer:

Given equation is $5x^2 - 7x - 6 = 0$

$5x^2 - 7x = 6$

Dividing in both sides oy 5

$x^2 - \frac{7}{5}x = \frac{6}{5}$ ------ (1)

$2xy = \frac{7}{5}x$

$y = \frac{7}{10}$

add $\left(\frac{7}{10}\right)^2$ on both sides of Equation (1)

$$x^2 - \frac{7}{5}x + \left(\frac{7}{10}\right)^2 = \frac{6}{5} + \left(\frac{7}{10}\right)^2$$

$$\left(x - \frac{7}{10}\right)^2 = \frac{6}{5} + \frac{49}{100}$$

$$\left(x - \frac{7}{10}\right)^2 = \frac{169}{100}$$

$$x - \frac{7}{10} = \pm\frac{13}{10}$$

$$x - \frac{7}{10} = \frac{13}{10} \text{ or } x - \frac{7}{10} = -\frac{13}{10}$$

$$x = \frac{13}{10} + \frac{7}{10} \text{ or } x = \frac{-13}{10} + \frac{7}{10}$$

$$x = \frac{20}{10} \text{ or } x = \frac{-6}{10}$$

$$x = 2 \text{ or } x = \frac{-3}{5}$$

16. Prove that $\frac{\cos A}{1 - \tan A} + \frac{\sin A}{1 - \cot A} = \sin A + \cos A.$

Answer:

$$\frac{\cos A}{1 - \tan A} + \frac{\sin A}{1 - \cot A} = \frac{\cos A}{1 - \frac{\sin A}{\cos A}} + \frac{\sin A}{1 - \frac{\cos A}{\sin A}}$$

$$= \frac{\cos^2 A}{\cos A - \sin A} + \frac{\sin^2 A}{\sin A - \cos A}$$

$$= \frac{\cos^2 A}{\cos A - \sin A} - \frac{\sin^2 A}{\cos A - \sin A}$$

$$= \frac{\cos^2 A - \sin^2 A}{\cos A - \sin A}$$

$$= \frac{(\cos A - \sin A)(\cos A + \sin A)}{\cos A - \sin A} = \cos A + \sin A$$

17. Construct a triangle ABC, in which AB = 5cm, BC = 7cm and $\angle ABC = 50^0$, then construct a triangle similar to it whose sides are $\frac{4}{5}$ of the corresponding sides of the first triangle.

Answer :

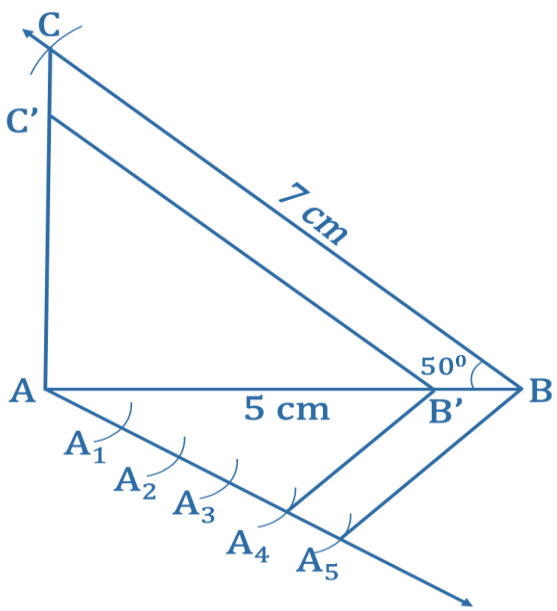

Steps of Construction:

1) Draw a triangle ABC with AB = 5 cm, BC = 7 cm and ∠ABC = 50°.
2) Draw a ray AX such that ∠BAX is an acute angle.
3) Draw A_1, A_2, A_3, A_4, A_5 arcs on AX such that A, = A_1A_2 = ... A_4 A_5
4) Join A_5 and B.
5) Draw a parallel line to A_5B through A_4 to meet AB at B'.
6) Draw a parallel line to BC through B' to meet AC at C'.
7) ΔAB'C' is required similar triangle.

18. A person from the top of a building of height 15m the top and bottom of a cell tower with the angle elevation as 60^0 and the angle of depression as 45^0 respectively. Find the height of the cell tower.

Answer :

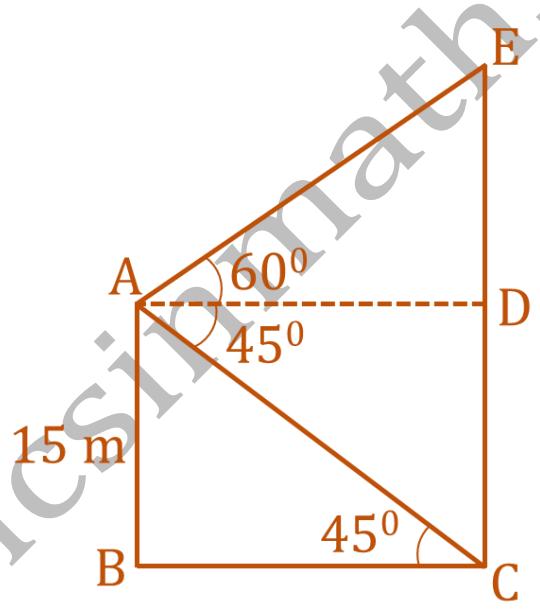

Let AB is the building of height 15 m

CE is the tower

$\angle EAD = 60^0$

$\angle DAC = \angle BCA = 45^0$

In Δ ABC

$\tan 45^0 = \frac{AB}{BC}$

$1 = \frac{15}{BC}$

BC = 15 m

⇒ AD = 15 m

In Δ ADE

$\tan 60^0 = \frac{ED}{AD}$

$\sqrt{3} = \frac{ED}{15}$

$ED = 15\sqrt{3}$ m

Height of the tower = CE = CD + DE

$= 15m + 15\sqrt{3}$ m

$= 15(1 + \sqrt{3})$ m

$= 15(1 + 1.732)$ m

$= 15(2.732)$ m $= 40.98$ m

PART – B

Chose the correct answer **20 × 1=20**

1. The exponential form of $\log_a \sqrt{x^4} = y$ (c)
   a) $a^y = x^4$ b) $y^a = 4$ c) $a^y = x^2$ d) $x^y = a^2$
2. The number of subsets of the null set is (a)
   a) 1 b) 0 c) 3 d) 4
3. If A and B are two disjoint sets and n (A) = 6, n(B) = 5, then n (A ∪ B) = ... (d)
   a) 5 b) 6 c) 30 d) 11
4. In a division, if divisor is (x + 1), quotient is 'x' and remainder is '4', then dividend is (c)
   a) $x^2 + x$ b) $4(x + 1) + x$ c) $x(x + 1) + 4$ d) $4x + 4$
5. Solution for the equations $\sqrt{3}x + \sqrt{5}y = 0$ and $\sqrt{7}x + \sqrt{11}y = 0$ (a)
   a) $x = 0, y = 0$ b) $x = 5, y = 3$ c) $x = 3, y = 5$ d) $x = 0, y = 3$
6. If $2x + 3y = 8$ and $4x + py = 16$ has infinite solutions, then the value of 'p' is (b)
   a) 8 b) 6 c) 10 d) 16
7. The value of x in the equation $3x - (x - 4) = 3x + 1$ is (d)
   a) – 3 b) 0 c) 1 d) 3
8. The sum of a number and its reciprocal is $\frac{17}{4}$, then the number is (b)
   a) 3 b) 4 c) 5 d) 7
9. The common difference of an AP in which $a_{25} - a_{12} = -52$ is (d)
   a) –1 b) –2 c) –3 d) –4
10. If $\frac{-2}{7}$, x, $\frac{-7}{2}$ are in G.P. then the value of x is (b)
    a) 2 b) 1 c) 0 d) 3
11. Sum of first 10 natural numbers is (a)
    a) 55 b) 35 c) 65 d) 50
12. If the slope of a line is '1', then the angle between the line and X – axis is (b)
    a) 30^0 b) 45^0 c) 90^0 d) 60^0
13. Ratio of areas of two similar triangles is 144 : 441, then the ratio of their perimeter is (d)
    a) 14 : 41 b) 44 : 41 c) 7 : 4 d) 4 : 7
14. The number of tangents that can be drawn to the circle from an external point is (a)
    a) 2 b) 0 c) 1 d) 3
15. Base area of prism is 30 cm^2 and its height is 10 cm. Then the volume of prism is (a)
    a) 300cm^3 b) 300 cm^2 c) 150 cm^2 d) 150 cm^3
16. Laddu is an example of ..... (b)
    a) cylinder b) sphere c) cone d) cube
17. $\sec\theta = ...$ (b)
    a) $\sqrt{1 - \cos^2\theta}$ b) $\sqrt{1 + \tan^2\theta}$ c) $\tan^2\theta - 1$ d) $\sin^2\theta - 1$
18. If the shadow of a tree is $\frac{1}{\sqrt{3}}$ times the height of the tree, then the angle of elevation of sun is (c)
    a) 30^0 b) 45^0 c) 60^0 d) 90^0
19. If P(E) is the probability of an event, then (d)
    a) $P(E) \geq 1$ b) $P(E) \leq 0$ c) $0 \leq P(E) < 1$ d) $0 \leq P(E) \leq 1$
20. Unimodal data may have ------ modes (b)
    a) 0 b) 1 c) 2 d) 3